Compact Flash Type I , II Card Connector

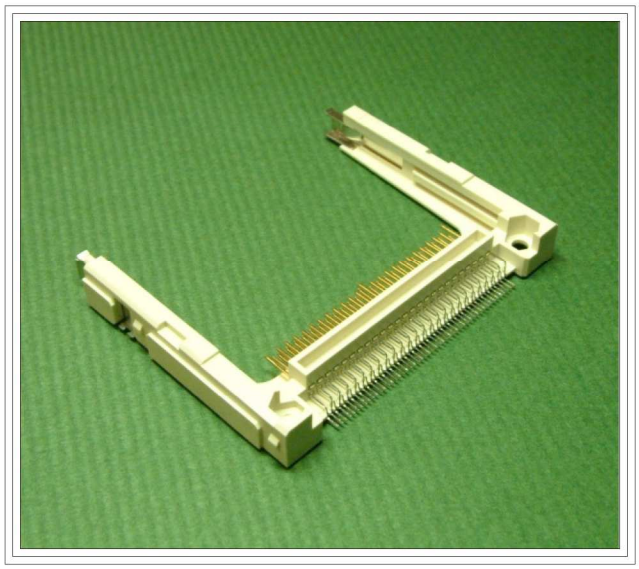

Part No:

CFCMD-35T15W000

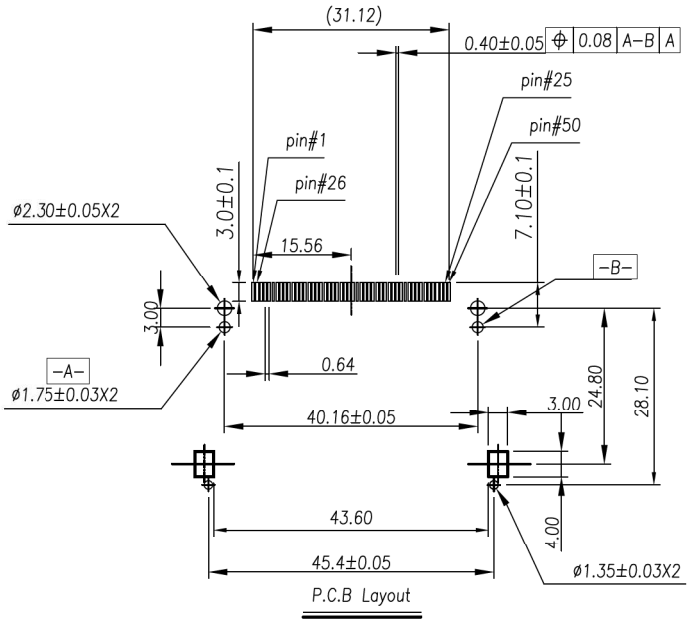

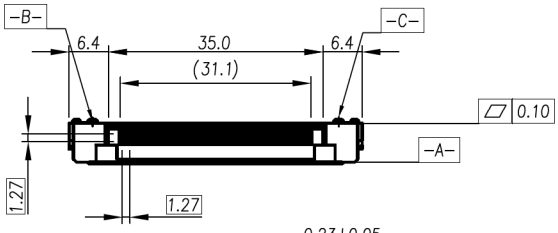

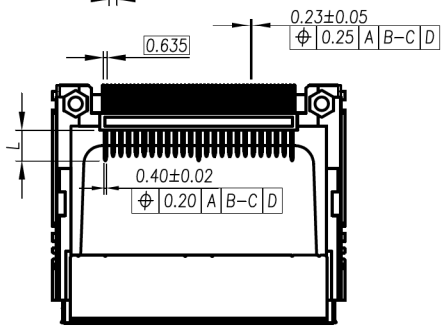

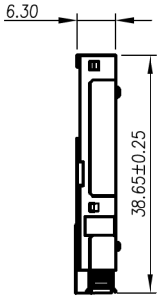

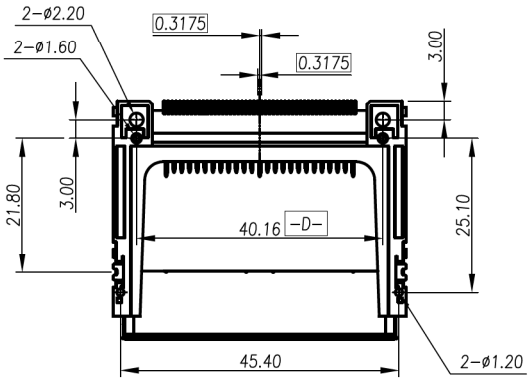

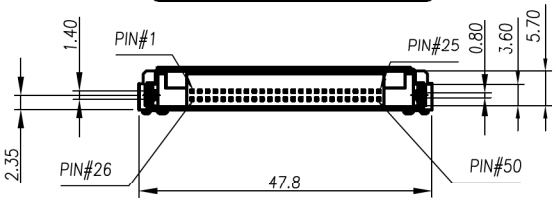

Pin Type	Interface Dim L	Pin Type
Detect	3.5 mm	25,26
General	4.25 mm	All Other Pins
Power	5.0 mm	1,13,38,50

Specification:

Withstanding Voltage: 500V AC Max for 1 Minute
Insulation Resistance: 1,000 M Ohm
Voltage Rating: 100V AC
Current Rating: 0.5A AC/DC Max
Contact Resistance: 40m Ohm Max
Operating Temperature:-40 C ~ +85 C
Insertion Cycles: 10,000 Times

Application:

For Compact Flash Type I Card Use

Material And Finish:

Contact Area Gold Plating 15
Contact: Copper Alloy
Housing: High Temperature Plastic, (UL 94V-0)